Supplementary Materials

A Soft, Bistable Valve for Autonomous Control of Soft Actuators

Philipp Rothemund,[1,2,3] Alar Ainla,[2] Lee Belding,[2] Sarah Kurihara,[2] Zhigang Suo,[1,3]

and George M. Whitesides[2,3,4]*

[1]School of Engineering and Applied Sciences, Harvard University, 29 Oxford St, Cambridge,

MA 02138, USA

[2]Department of Chemistry and Chemical Biology, Harvard University

12 Oxford St. Cambridge, MA 02138, USA

[3]Kavli Institute for Bionano Science and Technology, Harvard University

29 Oxford Street, Cambridge, MA 02138, USA

[4]Wyss Institute of Biologically Inspired Engineering

60 Oxford St. Cambridge, MA 02138, USA

*Corresponding author, email: gwhitesides@gmwgroup.harvard.edu

Fabrication

Preparation of pre-polymer solutions

In this study, we used five different elastomers (Ecoflex 30, Dragon Skin 10NV, Dragon Skin 30, Smooth-Sil 950, all from Smooth-On, and Sylgard 184 from Dow Corning). Their prepolymer mixtures were prepared in three steps: (i) adding the two components, A and B, (ii) mixing the components by manually stirring them, and (iii) degassing the mixture under vacuum. The pre-polymer mixtures of Ecoflex 30 and Dragon Skin 30 were prepared by mixing their components, A and B, in a 1:1 ratio, stirring the mixture manually for ~ 5 min, and degassing for ~ 10 min. The pre-polymer mixture of Smooth-Sil 950 was prepared by mixing its components in a 10:1 ratio, stirring the mixture for ~ 5 min, and degassing for ~ 10 min. The pre-polymer mixture of Dragon Skin 10NV involves a 1:1 ratio of its components, ~ 2 min of mixing, and ~ 5 min of degassing. The pre-polymer mixture of Sylgard 184 requires a 10:1 ratio of its components, manual stirring for ~5 min, and degassing for ~30 min.

Fabrication of devices for characterization of ΔP_1 and ΔP_2 as a function of geometry

Input files for the 3D-printer for all molds for the devices used to measure the critical pressures are uploaded as data file S1 to the auxiliary supplementary information. We filled the molds with the pre-polymer mixture (Dragon Skin 10NV) (fig. S9) and waited until all the air bubbles in the mixture disappeared. The molds for the end pieces were covered with microscope cover slips to ensure homogenous thickness, while the molds for the center of the devices have a lid, containing ventilation holes, so that excess material is squeezed out when the lid is placed on the mold. We cured the elastomers in the molds for two hours at room temperature before demolding. After demolding, we cut off the excess material on the center-piece, present due to the ventilation holes, with scissors. At each end of the center-piece of the device, we punched out

two holes of 3 mm diameter (on opposite sides, ~ 5 mm from the end) (fig. S10) to connect tubing to the valve. We used Dragon Skin 10 NV to glue the pieces together (fig. S10), and cured the assembly in an oven at 60 °C for 10 min.

Fabrication of tubing inside of valves

Input files for the 3D-printer for all molds for the tubing are uploaded as data file S2 to the auxiliary supplementary information. To fabricate the tubing inside the valve, we filled a syringe with the pre-polymer mixture (Smooth-Sil 950) and degassed it inside the syringe for 10 min before injecting the content of the syringe into the assembled mold (fig. S11) through an opening at the bottom. The conical tip (Dragon Skin 10NV) and the component used to connect the tubing to the conical tip (Smooth-Sil 950) were made with two separate molds (fig. S11). These two components were fabricated by pouring the pre-polymer mixture into their molds, allowing the air bubbles to dissipate, and covering the molds with a microscope cover slip to ensure homogenous thickness. We cured the pieces for 24 hours at room temperature before demolding. After demolding, the tubes were cut to the desired length (which varied depending on the demonstration). We glued the pieces together (fig. S12) using Dragon Skin 10 NV as glue, and cured the assembly at 60 °C for 10 min.

Fabrication of the transparent valve

Input files for the 3D-printer for all molds for the transparent valve are uploaded as data file S3 to the auxiliary supplementary information. The molds (fig. S13) for the walls of the valve, and those for the end pieces, were filled with the pre-polymer mixture of Sylgard 184. For the horizontal channels in the end pieces we stuck 16-gauge needles into the molds through openings in their sides before filling the mold for the membrane with the pre-polymer mixture of Dragon Skin 10NV. After waiting for the air-bubbles to disappear, we closed the molds of the

walls, and the end pieces with vented lids, and covered the molds for the end pieces with glass slides. We cured the elastomers for 48 hours before demolding. The tubing was glued into the top end piece (11-mm long, fabricated as above), and bottom end piece (20-mm long) (fig. S14). We also glued the bottom and top wall onto the membrane and the tip of the bottom tubing onto the bottom of the membrane. Finally, we glued the end pieces to the walls of the valve. For the gluing process, we used Dragon Skin 10NV as glue, and cured the glue after each step for 10 min at 60°.

Fabrication of the automatic gripper

Input files for the 3D-printer for all molds for the automatic gripper are uploaded as data file S4 to the auxiliary supplementary information. After filling the molds with the pre-polymer mixture of Dragon Skin 30 (fig. S15) and allowing time for the air bubbles to disappear, we covered the molds of the valve and the contact sensor with vented lids, and covered the mold for the top of the valve with a microscope coverslip. For the vertical channels in the valve, and the gripper, we stuck 16-gauge needles through openings in the lids into a notch in the bottom of the mold. To fabricate the strain-limiting layer, we placed a sheet of paper (VWR 21914-758) on an acrylic plate, spread pre-polymer of Dragon Skin 30 on the paper, and cured for 16 hours before demolding.

The 13-mm long tubing (fabricated as above) in the base of the gripper, and the 12-mm long tubing in the top cap of the valve, were glued in place using the prepolymer mixture of Dragon-Skin 30 (fig. S16). We then glued the conical tip of the top tubing to the top side of the membrane, and the top end onto the walls of the valve, with a syringe needle (16 gauge) inserted in the vertical channel of the wall to prevent clogging. In the next step, we glued the conical tip of the bottom tubing to the bottom side of the membrane. Afterwards we glued the valve onto the

gripper, again using a syringe needle (16 gauge) to prevent clogging of the vertical channel of the gripper. Each gluing step was followed by curing for 10 min at 60 °C.

To connect the contact sensor to the gripper, we punched a hole (2 mm diameter) into the strain-limiting layer before gluing the assembled gripper onto to the strain-limiting layer. A 16-gauge needle in the opening of the bottom chamber of the valve (for the connection to the contact sensor), prevented clogging. After curing at room temperature for 16 hours, we cut out the shape of the gripper. We glued a single tube (6-mm long, fabricated as above) (fig. S16) into the contact sensor and the other end of the tube to the opening in the palm of the gripper, and the rim of the contact sensor to the gripper.

We connected the gripper to the pressure sources by puncturing the walls of the top chamber, the bottom chamber, and the channel in the base with hypodermic needles (16-gauge). We glued the needles to the gripper with the adhesive RTV 159 (Momentive).

Fabrication of the oscillator

Input files for the 3D-printer for all molds for the oscillator are uploaded as data file S1 to the auxiliary supplementary information. The oscillator was molded with the pre-polymer mixture of Dragon Skin 10 NV (fig. S17). The channels in the end pieces were formed by placing needles (16 gauge) into their molds, before adding the pre-polymer. After waiting for the bubbles to disappear, we covered the mold for the end pieces of the valve with microscope cover slips and closed the mold of the center part of the valve with its lid, and stuck a syringe needle (16 gauge) through the opening in the lid into a notch in the bottom of the mold. We cured the pieces for 2 h at room temperature before demolding. After demolding we glued tubing (20-mm long, fabricated as above) to the bottom and top end pieces (11-mm long), using Dragon Skin 10 NV as glue (fig. S18). Before gluing the top end piece on the valve, we placed a syringe needle

(16 gauge) in the vertical channel to prevent clogging. In a next step we glued the conical tip of the bottom tubing to the bottom side of the membrane and then glued the bottom end piece to the wall. Each gluing step was followed by curing for 10 min at 60 °C.

Fabrication of the earthworm

Input files for the 3D-printer for all molds for the earthworm are uploaded as data file S1 to the auxiliary supplementary information. Fabricating the bellows actuator began with pouring Dragon Skin 30 pre-polymer on the outer pieces of the mold (fig. S19), closing the mold around the core, and squeezing out excess polymer. We filled the mold for the rear end piece of the actuator with Dragon-Skin 30 pre-polymer (fig. S19), closed the mold after the bubbles disappeared, and stuck 16-gauge needles through the lid of the mold, to form the channels. We filled the mold for the front end-piece with Dragon-Skin 30 pre-polymer, and covered it with microscope cover slips, after the air bubbles disappeared. The retaining spring was molded with Ecoflex 30, and remaining pieces of the valve with Dragon Skin 10NV. Needles (16-gauge), stuck into the molds, formed the channels in the valve, analogous to the process used to make the oscillator. We cured the pieces for 24 hours before assembling the earthworm in three steps (fig. S20): (i) assembling the rear end-piece and the valve (length of tubing in bottom chamber 20 mm; for the top tubing we cut one tube 11 mm long, as before and left the other tube longer to connect to the external pressure source); (ii) gluing the end-pieces on the bellows actuator; (iii) gluing the retaining spring on the earthworm.

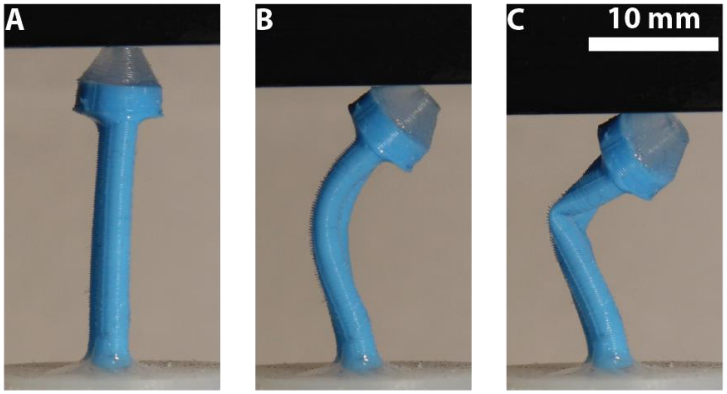

Fig. S1. Kinking of tubing. (**A**) Initially the tubing is straight. (**B**) When the tubing is compressed axially it buckles out of plane (Euler buckling) without reducing the air flow through it. (**C**) At a critical compression, a kink forms, which blocks the air flow.

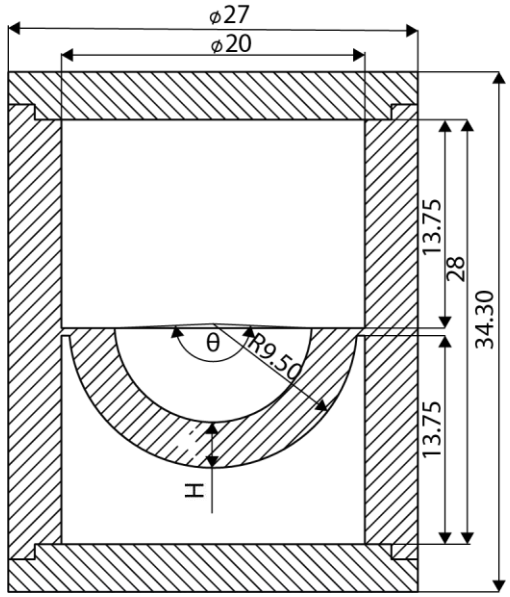

Fig. S2. Geometry of devices used for measuring the critical pressures. The dimensions are in mm. We measured the switching pressures as a function of H for $H = 0.5$ mm to $H = 4.50$ mm with $\theta = 180^{\circ}$, and as a function of θ from $\theta = 140^{\circ}$ to $\theta = 180^{\circ}$ at $H = 3$ mm. All other dimensions remained constant.

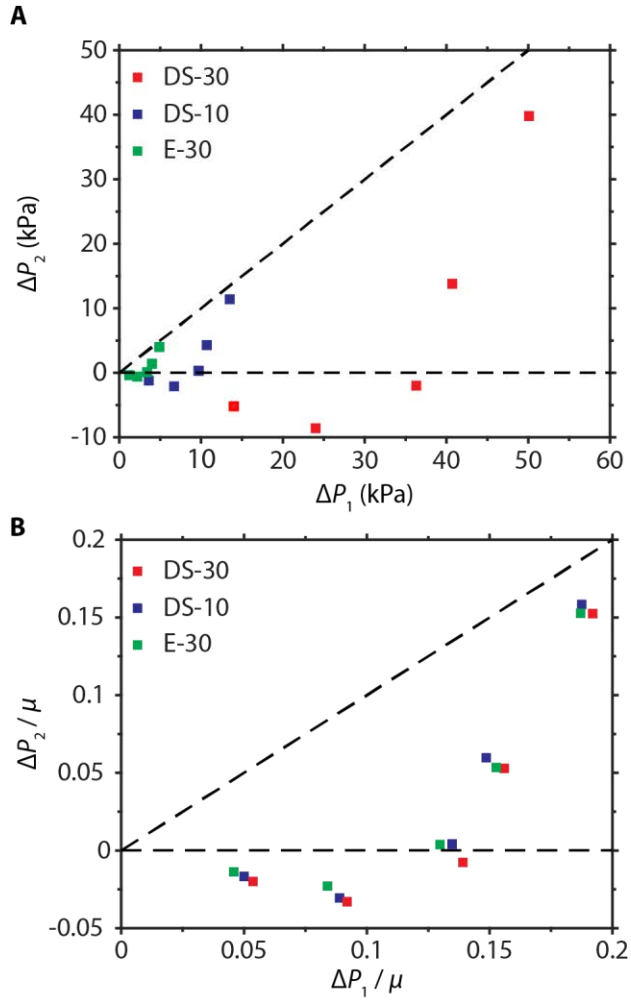

Fig. S3. The critical pressures as a function of the shear modulus of the material. The membranes were fabricated using E-30 (Ecoflex 30, shear modulus μ = 26.2 kPa), DS-10 (Dragon Skin 10NV, μ = 72.0 kPa), and DS-30 (Dragon Skin 30, μ = 262 kPa), with θ = 180º, and H = 2.0 mm, 3.0 mm, 3.5 mm, and 4.0 mm. **(A)** Measured critical pressures on the $\Delta P_2 - \Delta P_1$ plane. Larger critical pressures are observed with stiffer material. **(B)** Measured critical pressures on the $\Delta P_2 - \Delta P_1$ plane, after dividing ΔP_1, and ΔP_2 by μ. Values for the same geometry collapse to a single point after correction, indicating that ΔP_1, and ΔP_2 are linearly proportional to the shear modulus of the material.

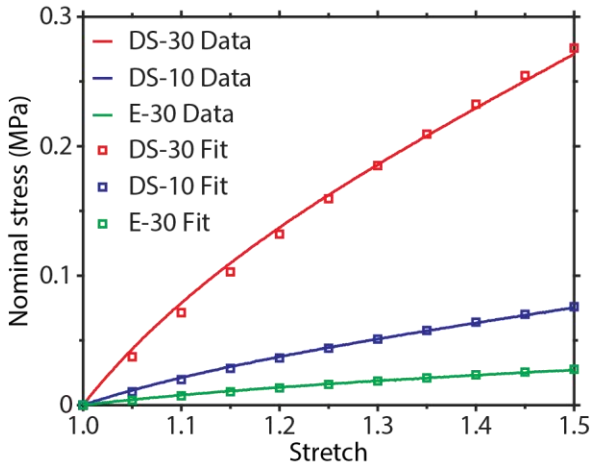

Fig. S4. Material Characterization. The nominal stress (s) as a function of the ratio between the extended length and the initial length (*i.e.*, the stretch, λ), for Dragon Skin 30, Dragon Skin 10NV, and Ecoflex 30 determined in a uniaxial tension test. Uniaxial samples of the three materials (length 100 mm, width 5 mm, thickness 2 mm) were stretched (50 mm/min extension rate) up to $\lambda = 1.5$ with an Instron 5966 (500 N load cell). We obtained the shear moduli of the materials (Dragon Skin 30: $\mu = 261$ kPa; Dragon Skin 10: $\mu = 72$ kPa; Ecoflex 30: $\mu = 26.2$ kPa;) by fitting the incompressible Neo-Hookean model for uniaxial deformation ($s = \mu\ (\lambda - \lambda^{-2})$) to the experimentally obtained curves (*43*).

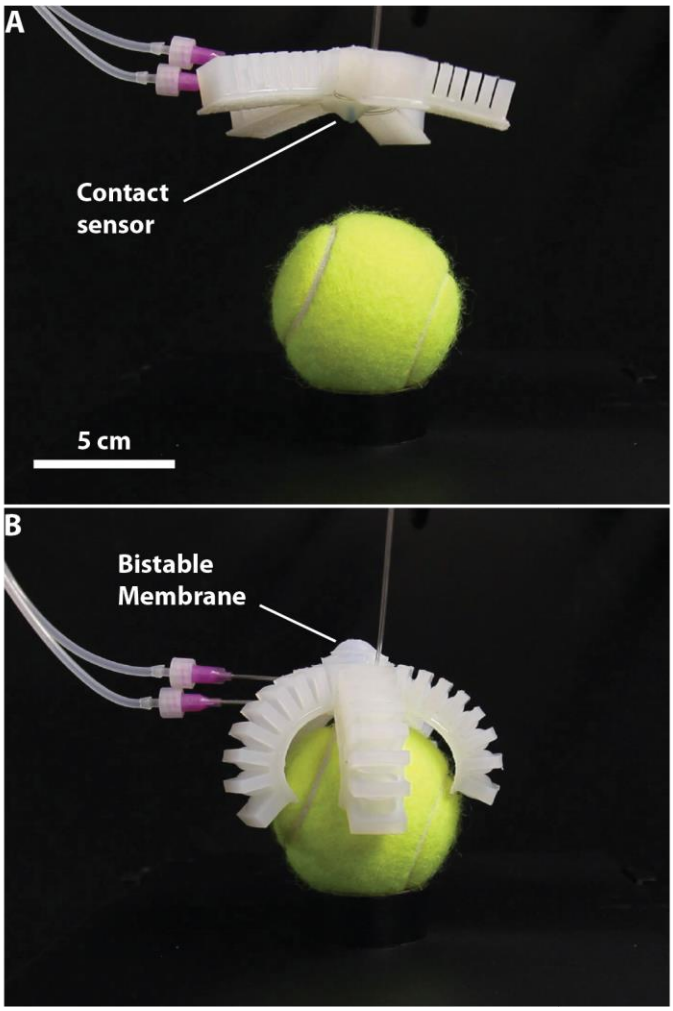

Fig. S5. Photographs of the starfish gripper with an integrated valve without a top chamber. **(A)** The gripper before contacting the ball. **(B)** The gripper after contacting the ball.

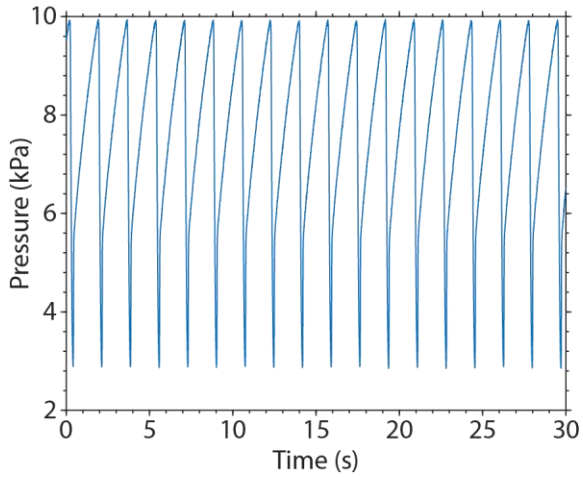

Fig. S6. Measurement of pressure as a function of time, for the soft oscillator with an additional pneumatic resistance. The curves were measured with P_S = 50 kPa, V = 50 ml with 2 cm long tubing of 0.79 mm inner diameter introduced between the pressure source, and the oscillator of Fig. 4.

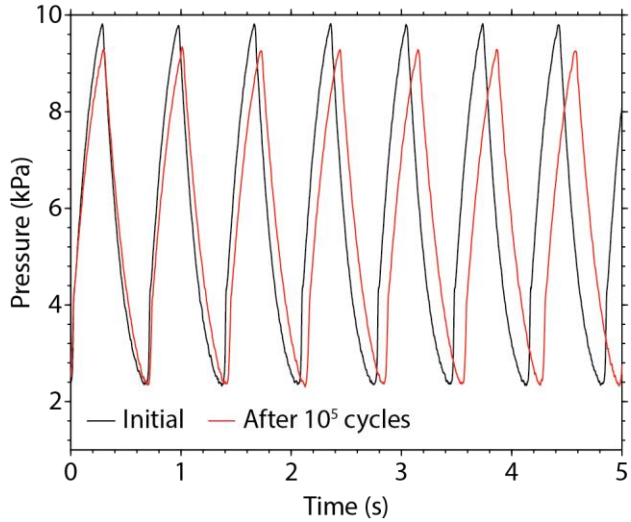

Fig. S7. Characterization of the soft oscillator after 10^5 cycles. Measurement of pressure as a function of time, for the soft oscillator in Fig. 4, with P_S = 11 kPa, V = 150 ml during initial characterization, and after 10^5 cycles.

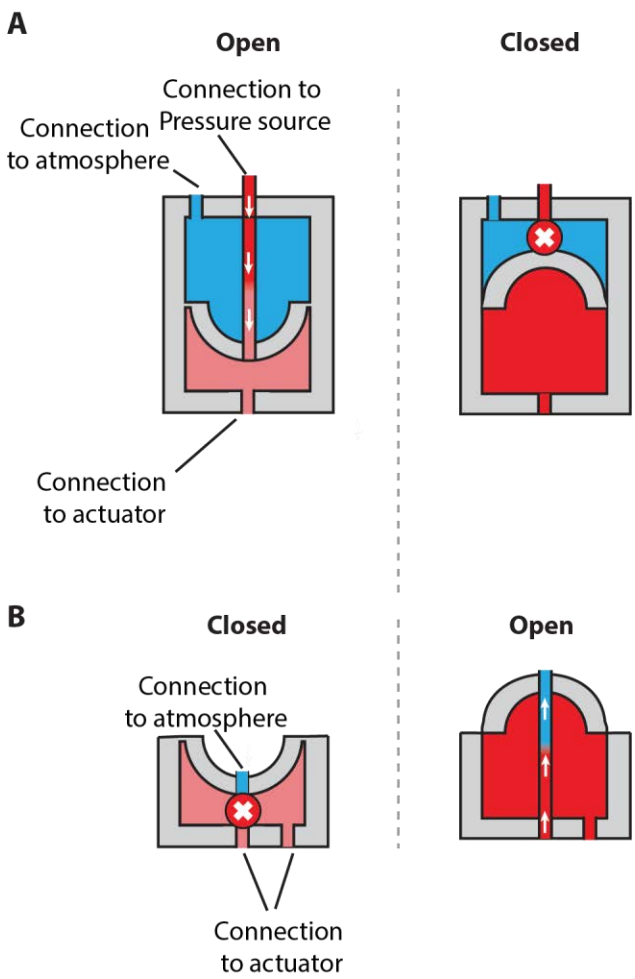

Fig. S8. Alternative designs of the valve. (A) A pressure limiting valve. **(B)** A pressure release valve.

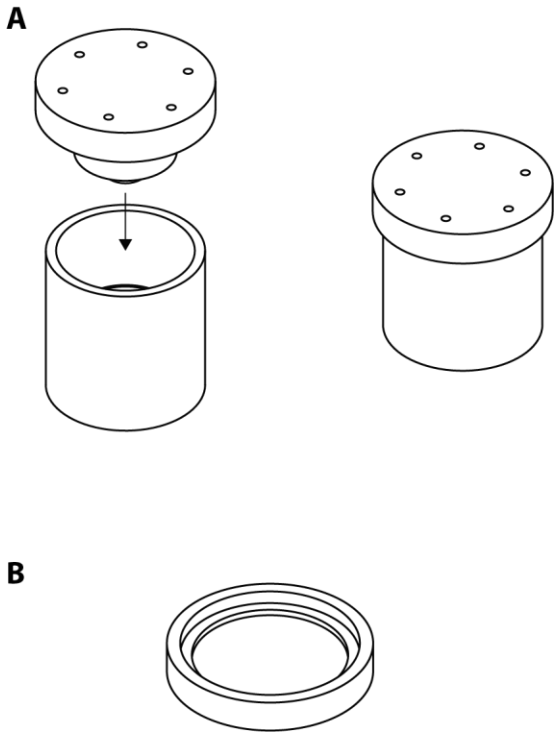

Fig. S9. Designs of the molds for the devices used for measuring the critical pressures. (A) Assembly of mold for the center piece (the membrane and surrounding chamber wall). The mold is closed after the pe-polymer is filled in. **(B)** Mold for the end pieces. Input files for the 3D-printer for all molds are uploaded as data file S1 to the auxiliary supplementary information.

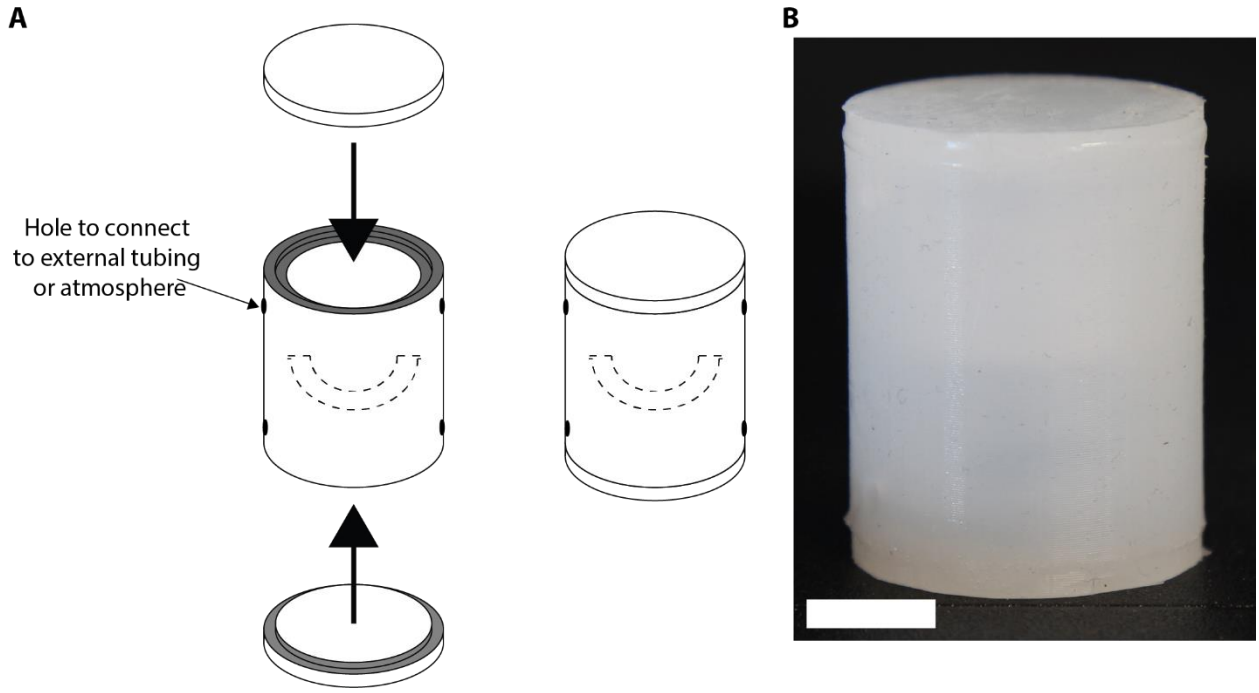

Fig. S10. Assembly of the devices used for measuring the critical pressures. (A) The gray areas mark areas where glue was applied. The dashed line indicates the orientation of the membrane. **(B)** Photograph of the assembled device. The scalebar corresponds to 1 cm.

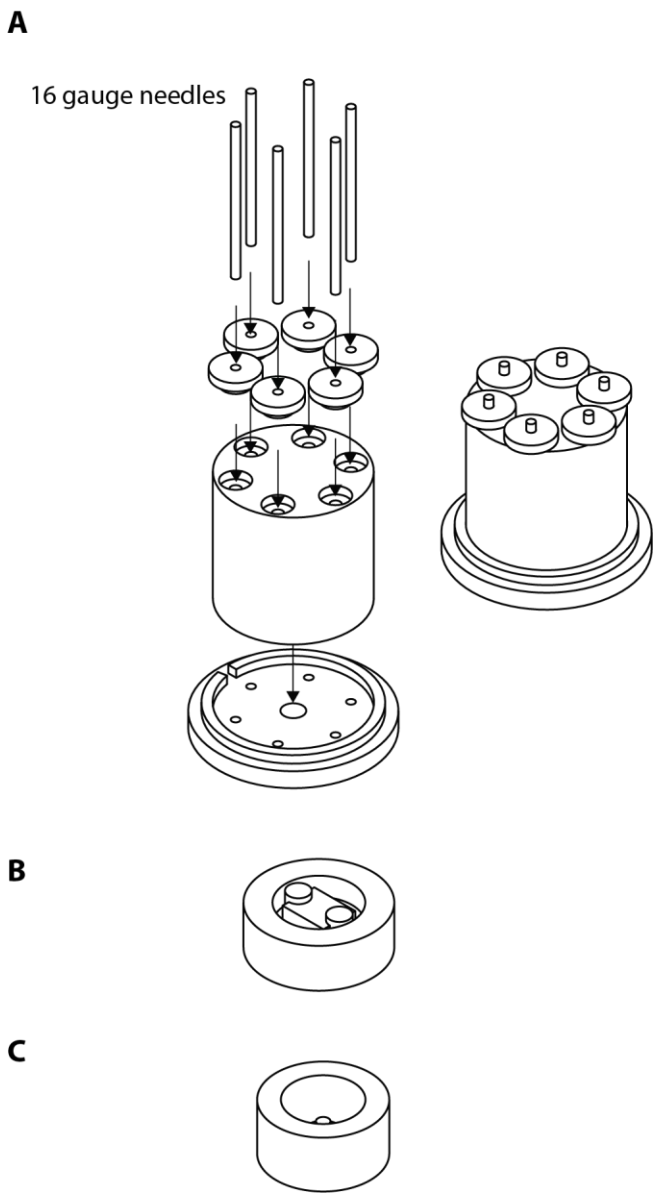

Fig. S11. Designs of the molds for the tubing used inside the chambers of the valves. (A) Assembly of the mold to fabricate six tubes, simultaneously. **(B)** Mold for the connector (between the tubing and the conical tip). **(C)** Mold for the conical tip. Input files for the 3D-printer for all molds are uploaded as data file S2 to the auxiliary supplementary information.

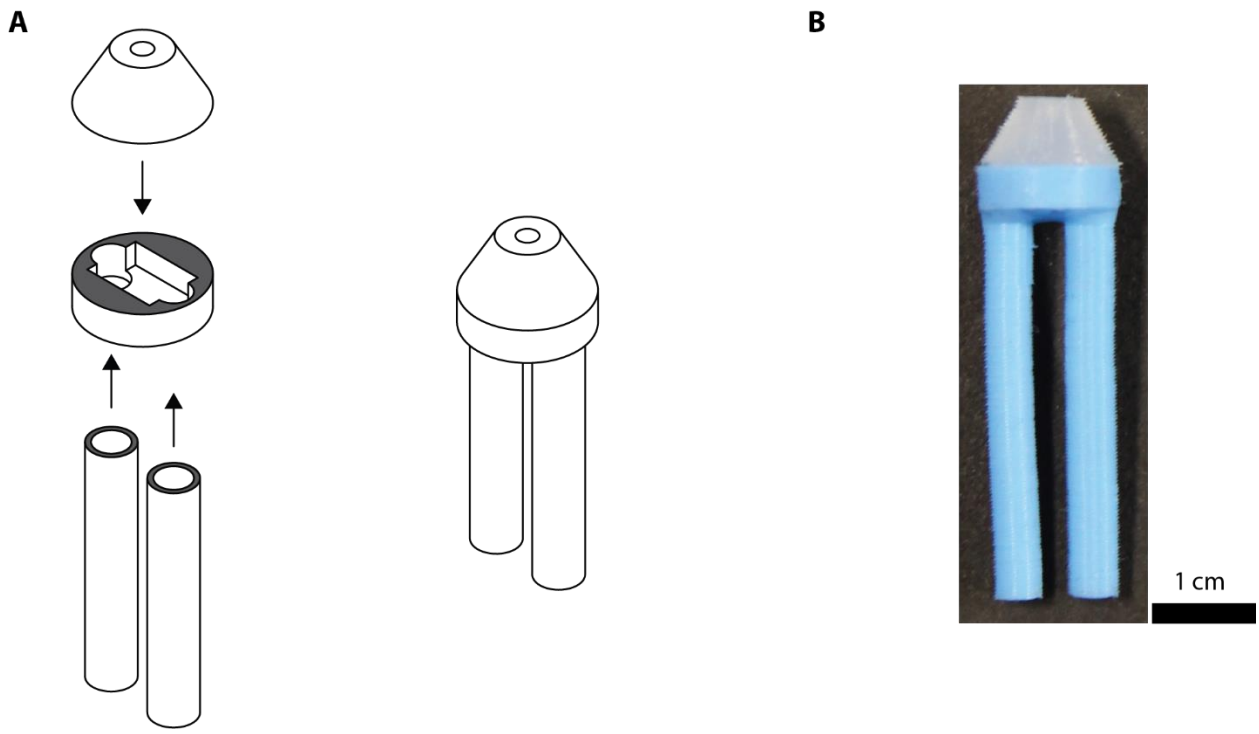

Fig. S12. Assembly of the tubing used inside the chambers of the valve. (A) The gray areas mark the locations where glue was applied. Alignment of the tubes with the connector is facilitated by keeping syringe needles in the tubes during the assembly. **(B)** Photograph of the assembled tubing.

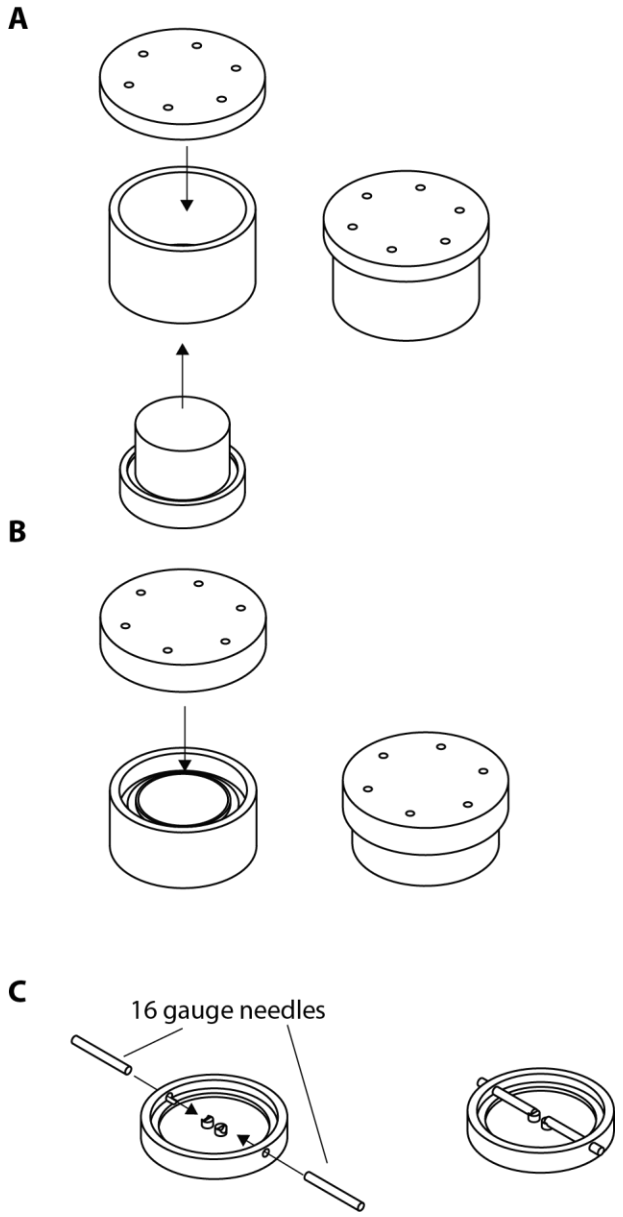

Fig. S13. **Designs of the molds for the transparent valve. (A)** Assembly of molds for the walls of the valve. The mold is closed after the pre-polymer is filled in. **(B)** Assembly of the mold for the membrane of the valve. The mold is closed after the pre-polymer is filled in. **(C)** Assembly of the mold for the top and bottom end pieces. Input files for the 3D-printer for all molds are uploaded as data file S3 to the auxiliary supplementary information.

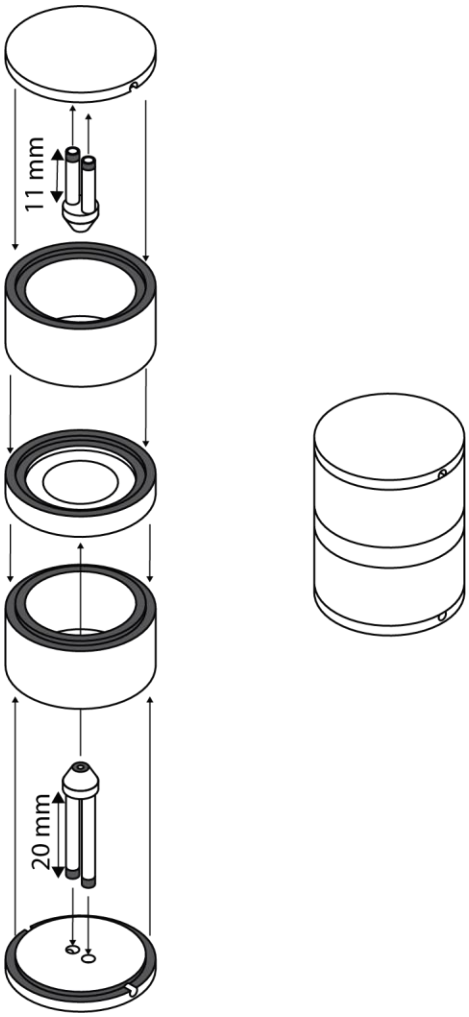

Fig. S14. Assembly of the transparent valve. The gray areas mark locations where glue was applied.

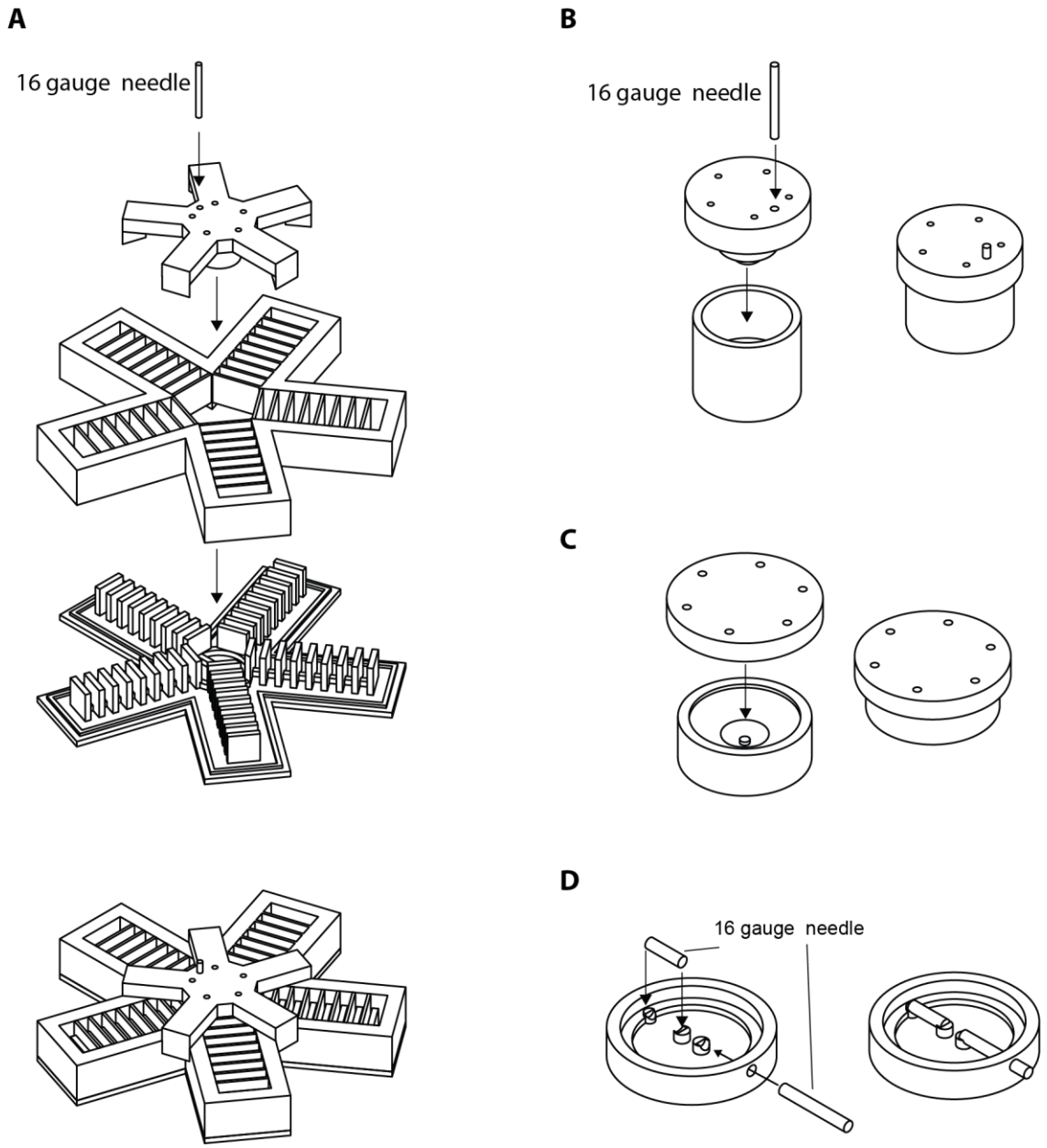

Fig. S15. **Designs of the molds for the autonomous gripper. (A)** Assembly of the molds for the bending actuators. **(B)** Assembly of the mold for the valve. The mold is closed after the pre-polymer is filled in. **(C)** Assembly of the mold for the contact sensor. The mold is closed after the pre-polymer is filled in. **(D)** Input files for the 3D-printer for all molds are uploaded as data file S4 to the auxiliary supplementary information.

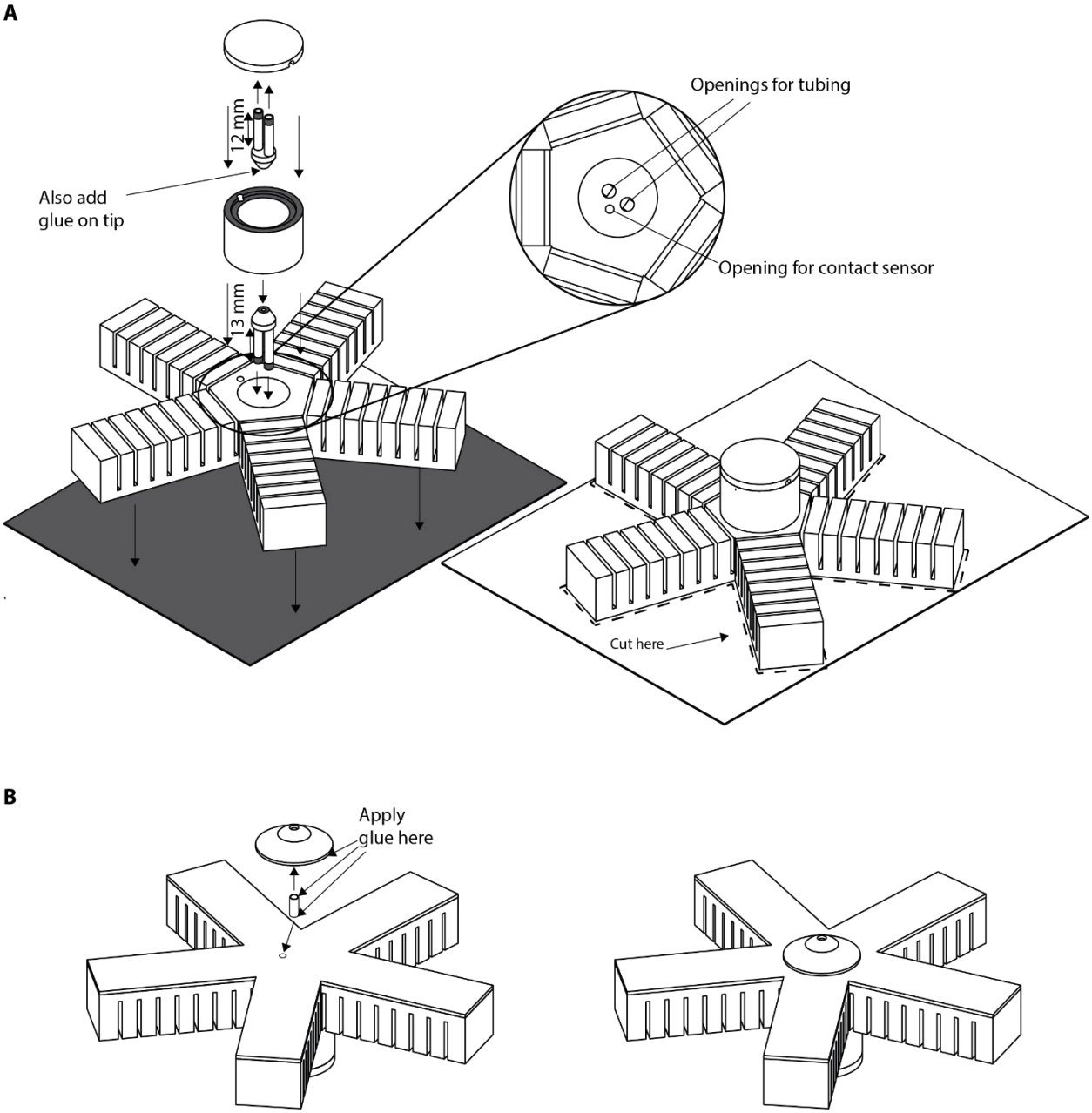

Fig. S16. Assembly of the autonomous gripper. (A) Assembly of the gripper. **(B)** Gluing of the contact sensor to the gripper. The gray areas mark locations where glue was applied. Alignment of tubing, and vertical channels with the connector is facilitated by keeping syringe needles in the tubes during assembly.

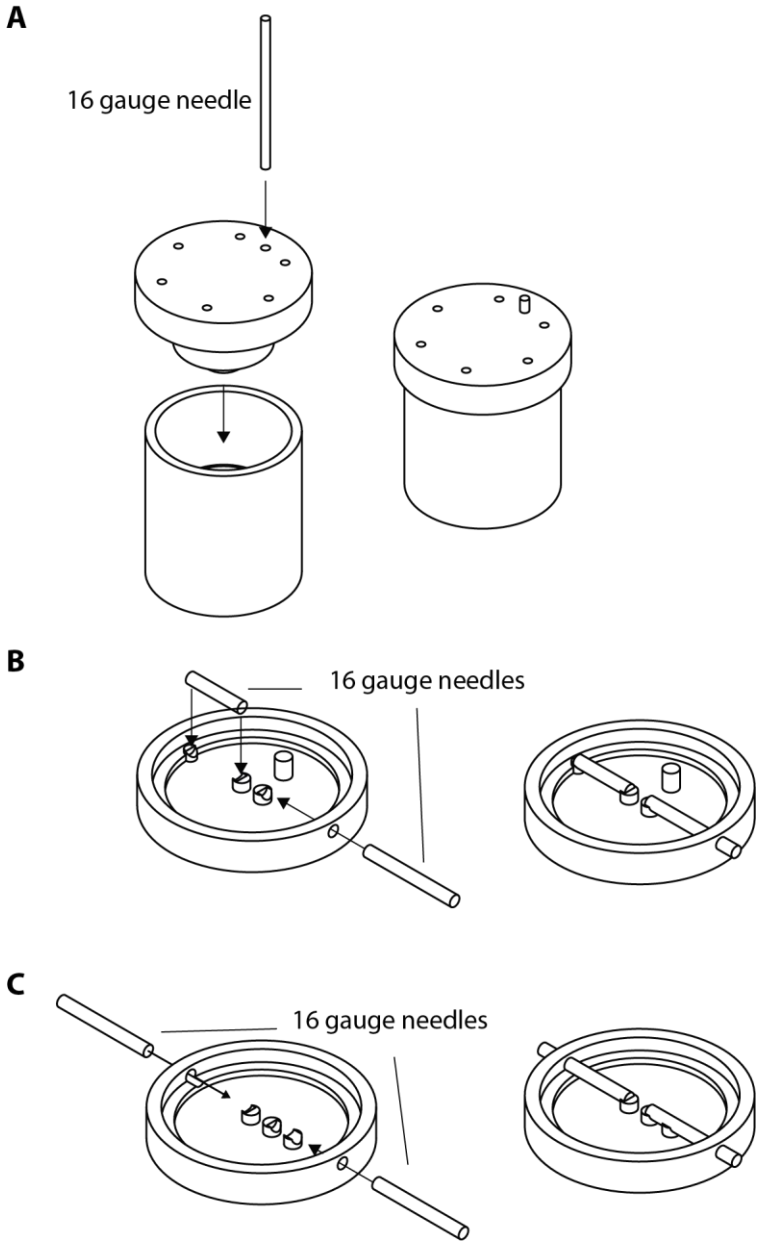

Fig. S17. **Designs of the molds for the oscillator. (A)** Assembly of the molds for the center of the valve. The mold is closed after the pre-polymer is filled in. **(B)** Assembly of the mold for the top end piece of the valve. **(C)** Assembly of the mold for the bottom end piece of the valve. Input files for the 3D-printer for all molds are uploaded as data file S5 to the auxiliary supplementary information.

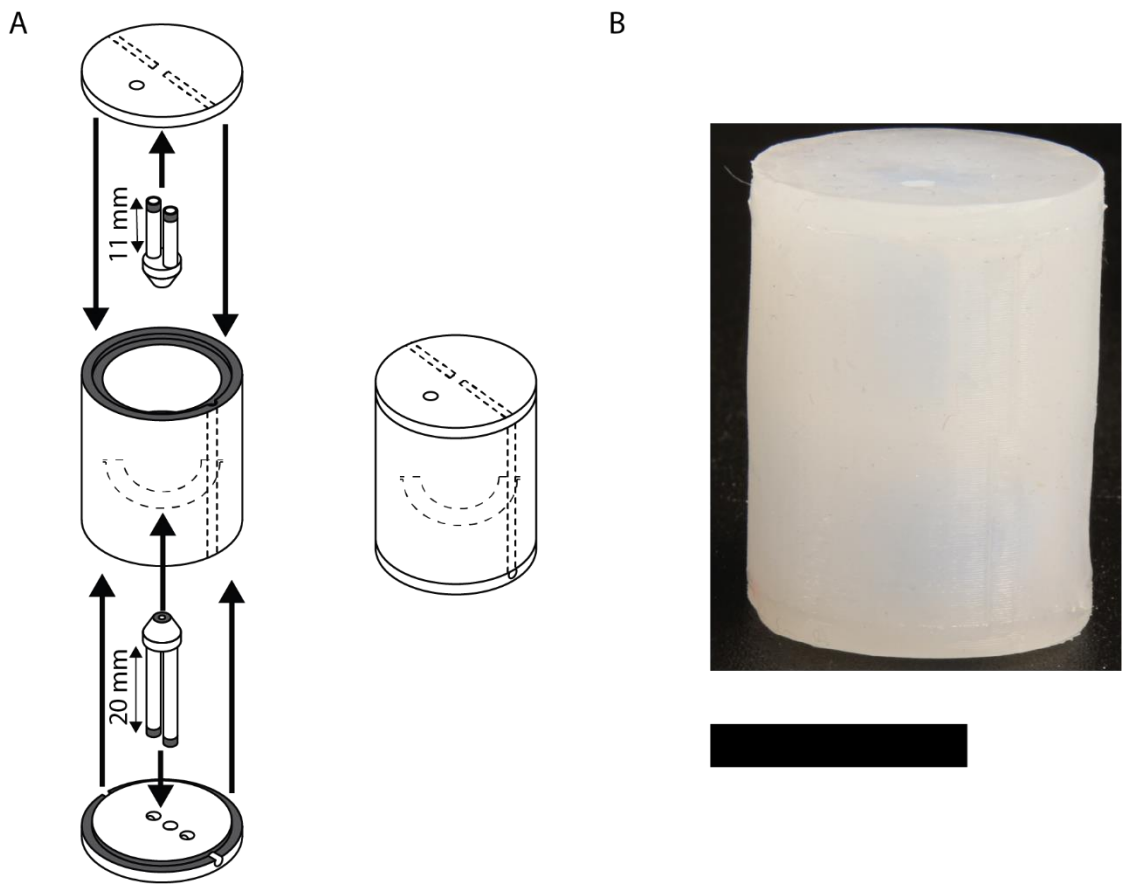

Fig. S18. Assembly of the oscillator (A) The gray areas mark locations where glue was applied. Alignment of the vertical channel in the wall with the top end piece is facilitated by keeping a syringe needle inside the vertical channel during gluing. **(B)** Photograph of the assembled oscillator. The scalebar corresponds to 2cm.

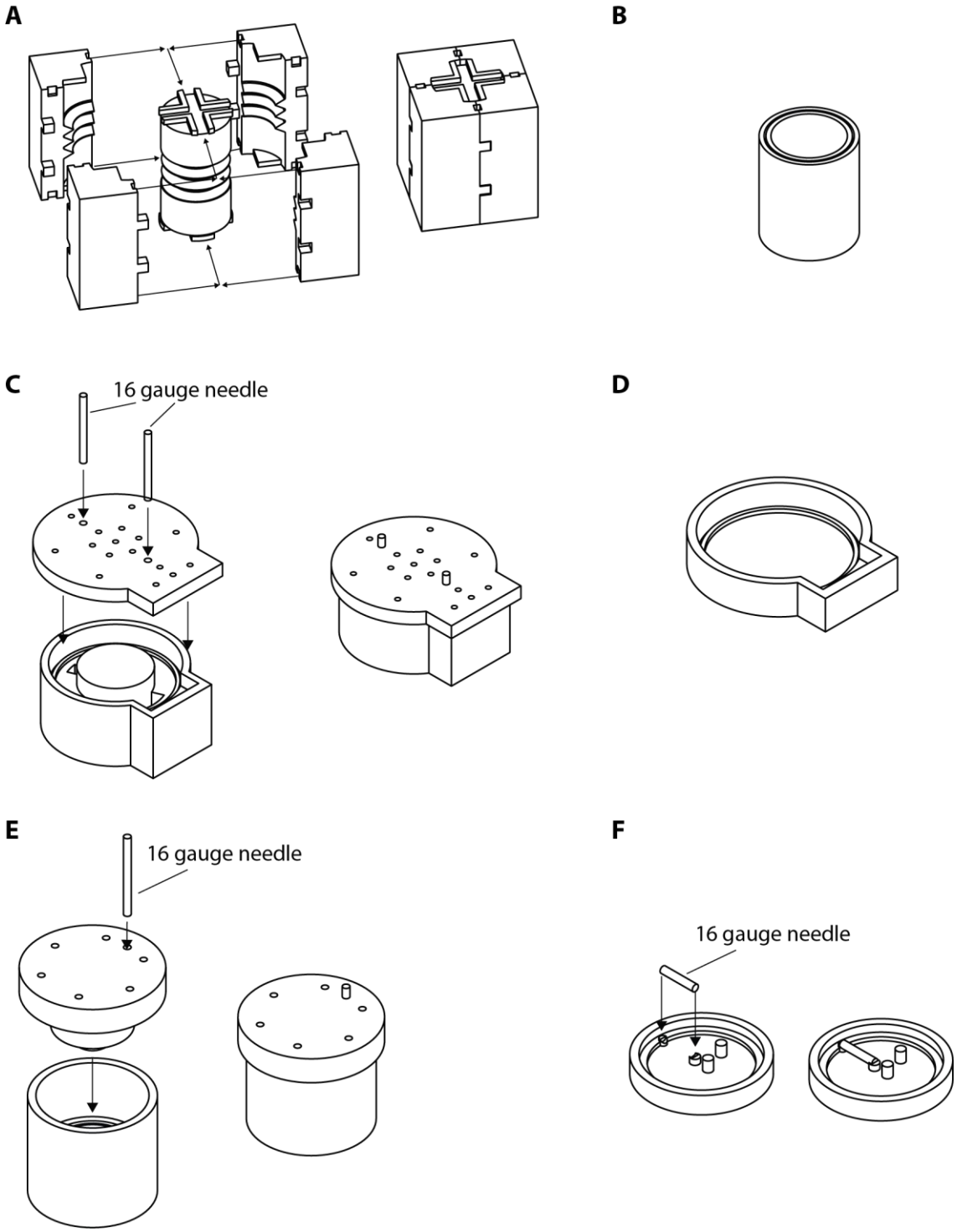

Fig. S19. **Designs of the molds for the earthworm-like walker (A)** Assembly of the mold for the bellows actuator. The mold is closed after the pre-polymer is filled in. **(B)** Mold for the retaining spring **(C)** Assembly of the mold for rear end-piece. The mold is closed after the pre-

polymer is filled in. **(D)** Mold for the front end-piece. **(E)** Assembly of the mold for the valve. The mold is closed after the pre-polymer is filled in. **(F)** Assembly of the mold for the top and bottom end pieces of valve. Input files for the 3D-printer for all molds are uploaded as data file S6 to the auxiliary supplementary information.

A

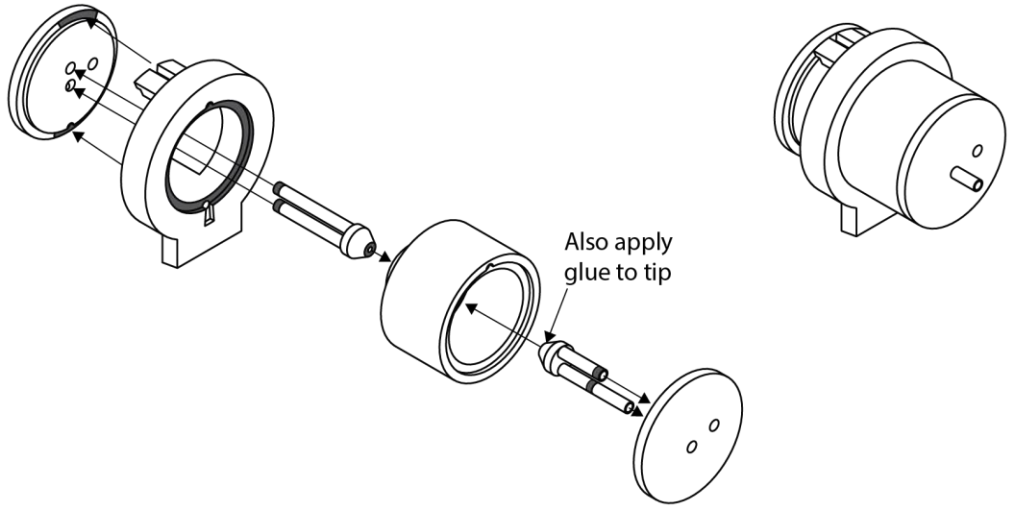

B

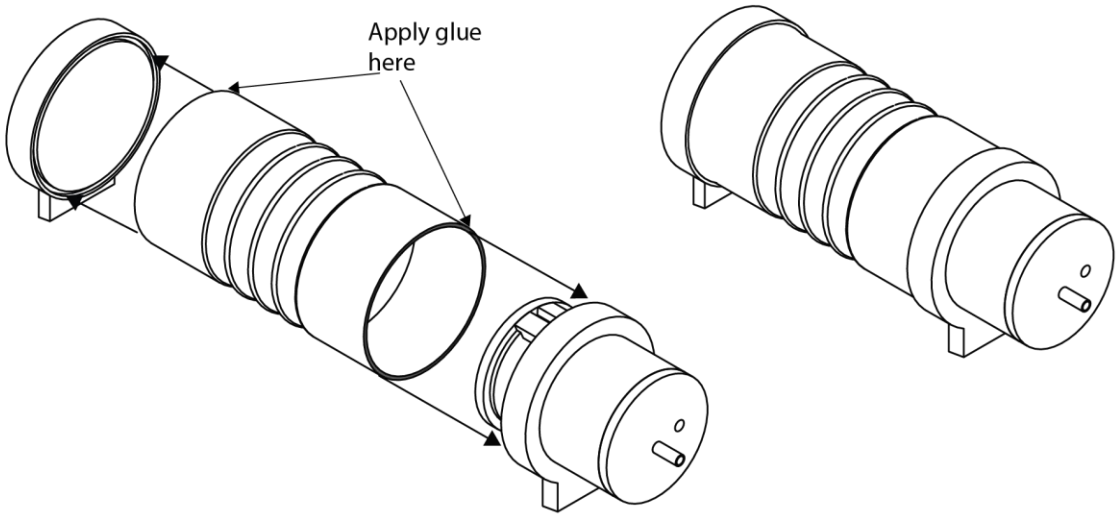

C

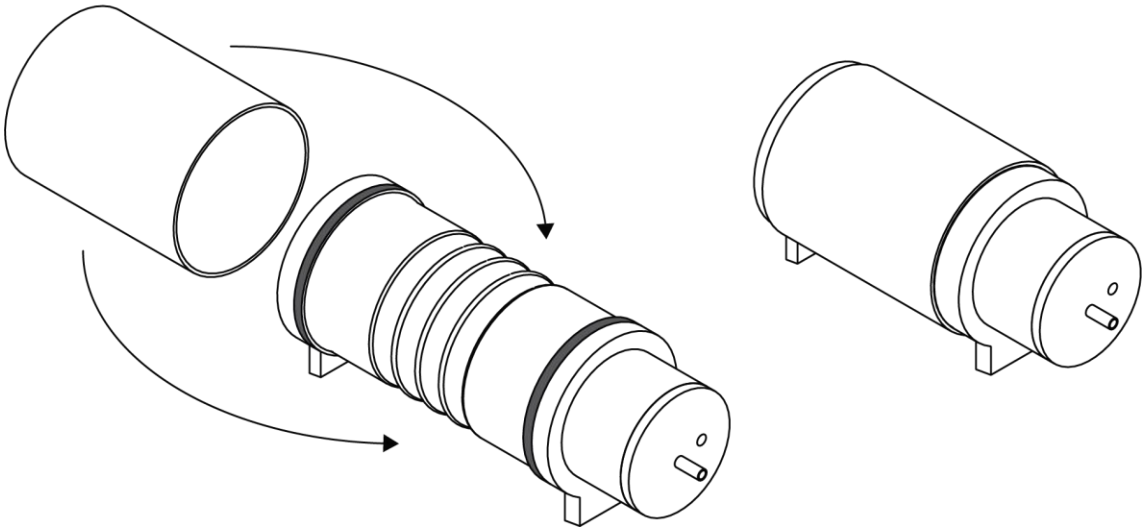

Fig. S20. **Assembly of the earthworm-like walker.** Grey areas mark where glue was applied. **(A)** Assembly of the rear end piece of the valve. **(B)** Gluing of the bellows actuator to both end pieces. **(C)** Gluing of the retaining spring to the bellows actuator.